Logiprint

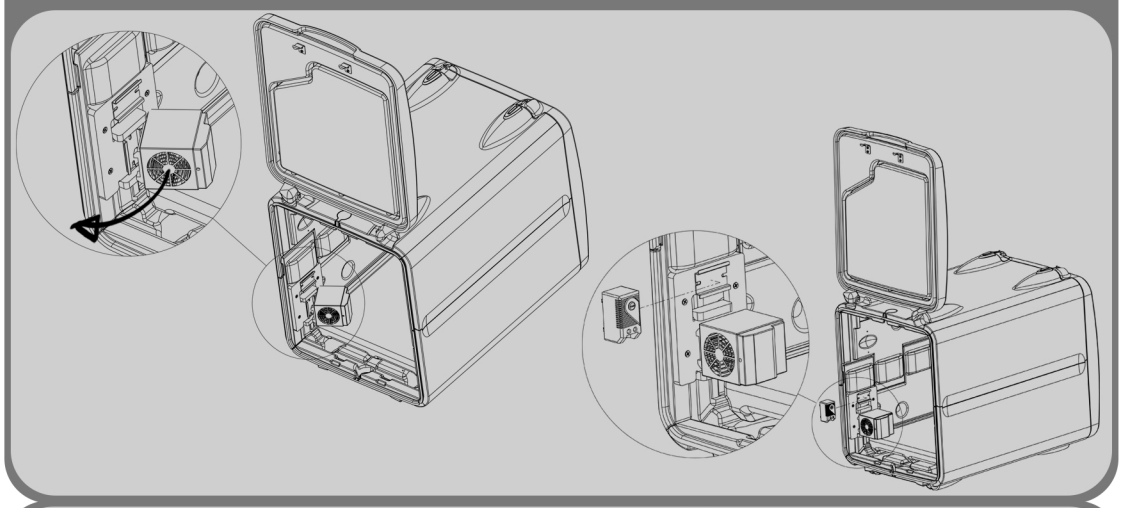

Option

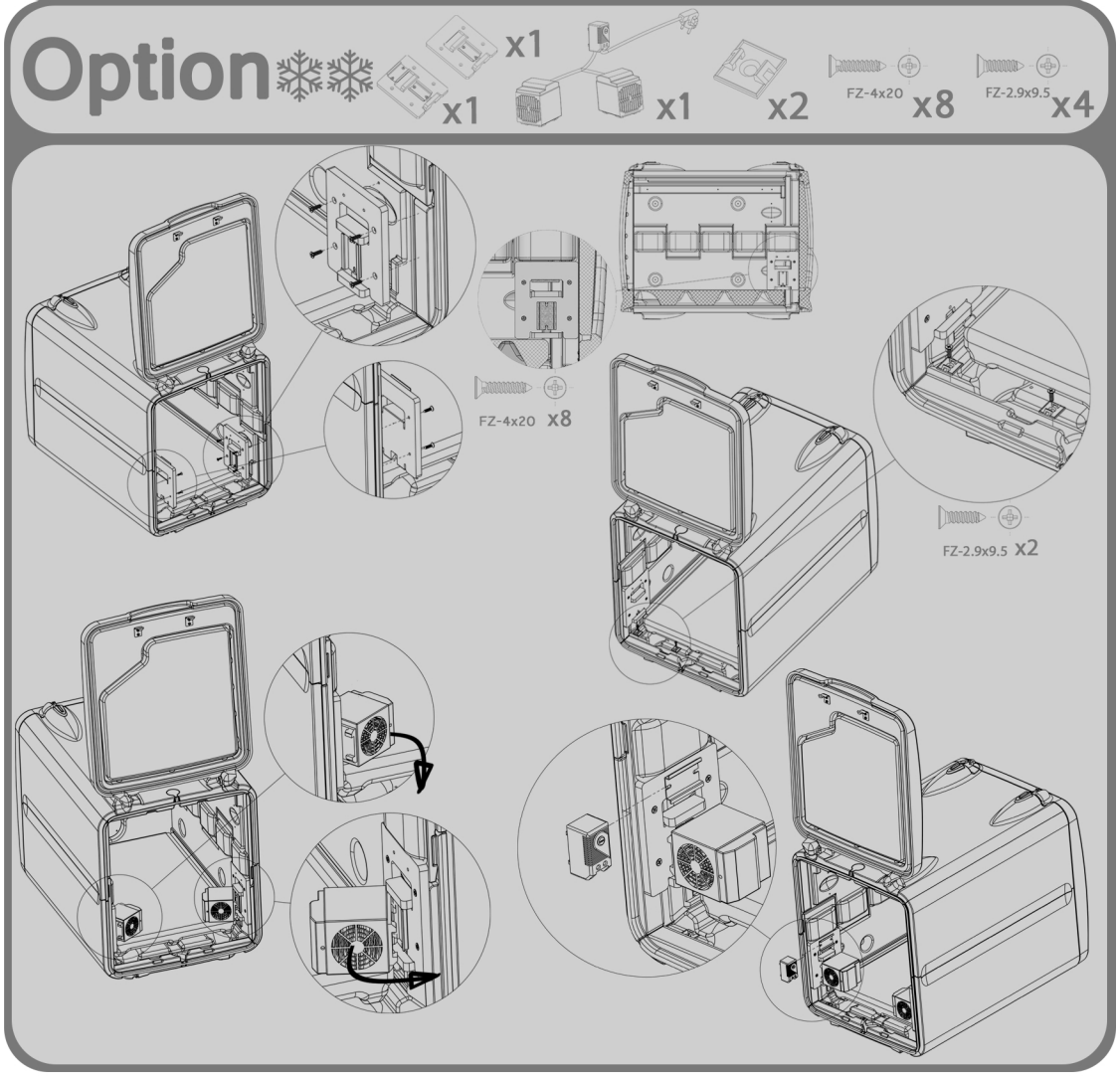

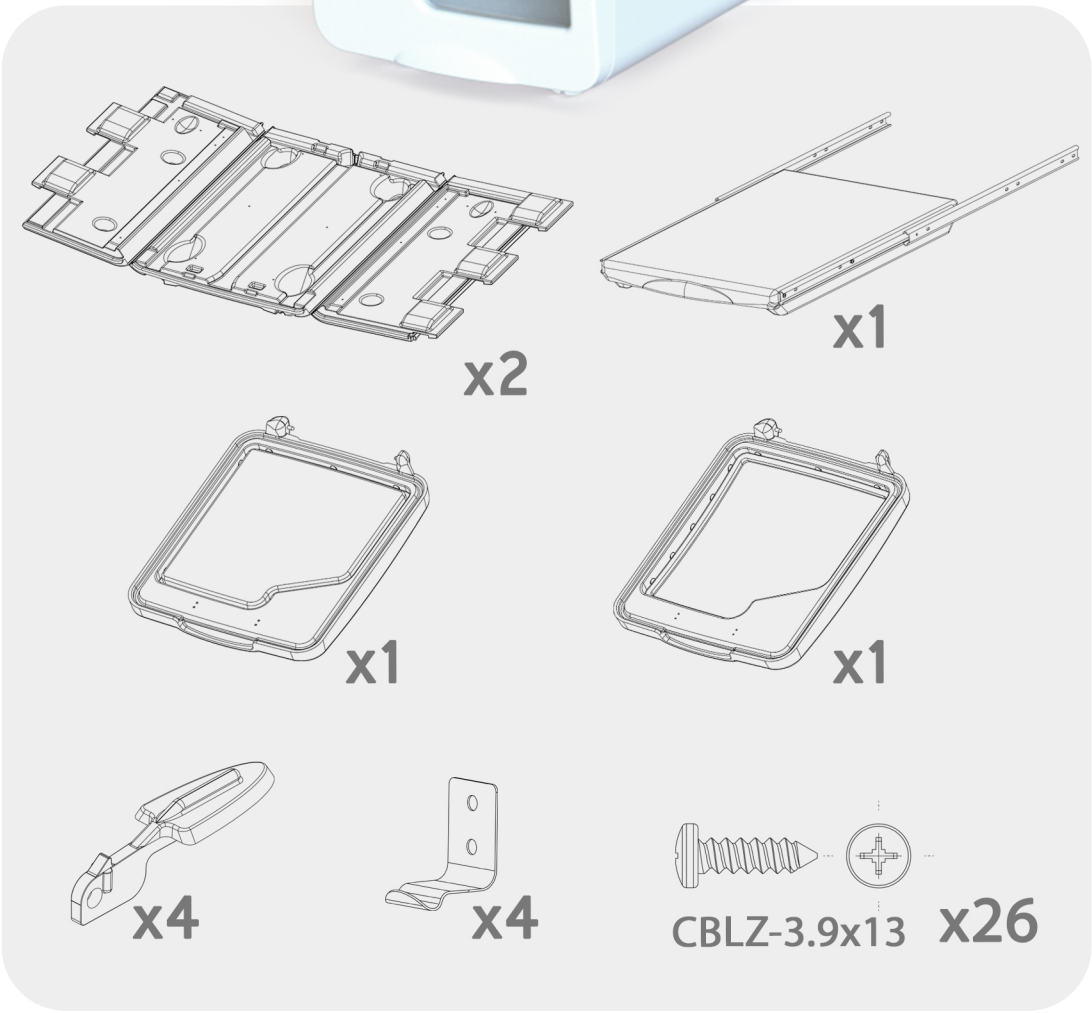

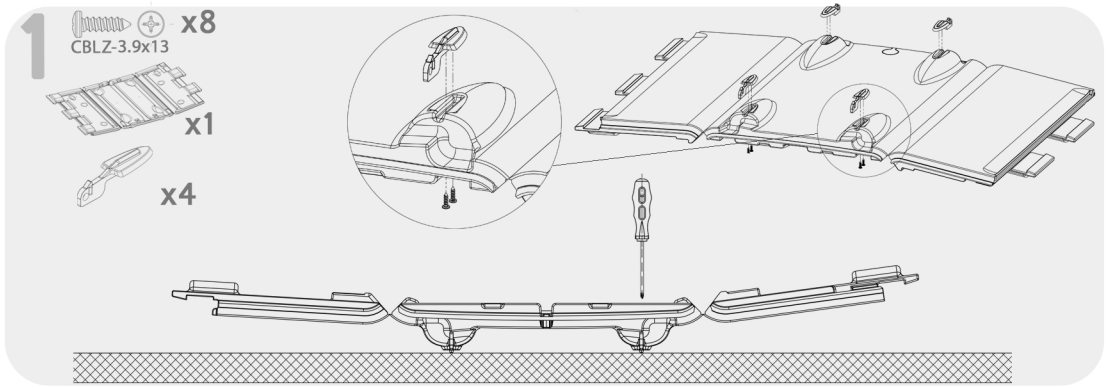
1
x8
CBLZ-3.9x13
x1
x4

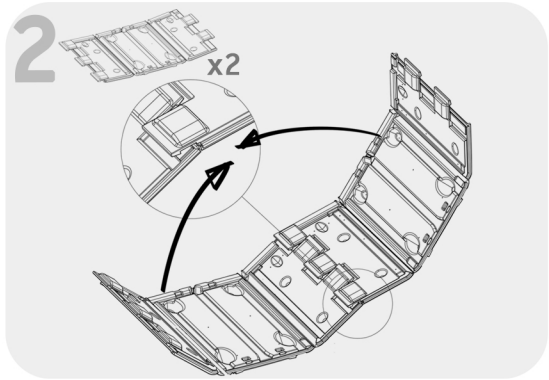
2
x2

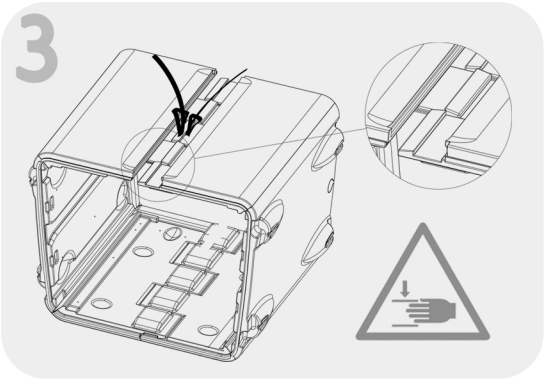
3

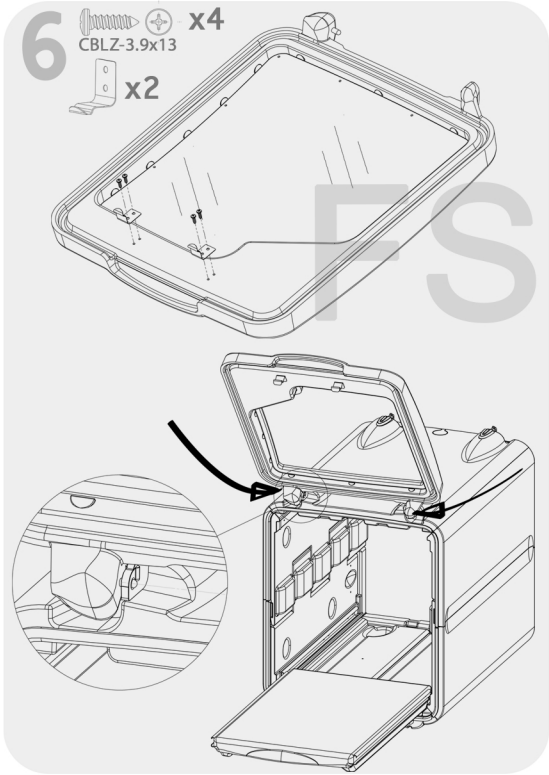
6
x4
CBLZ-3.9x13
x2
FS

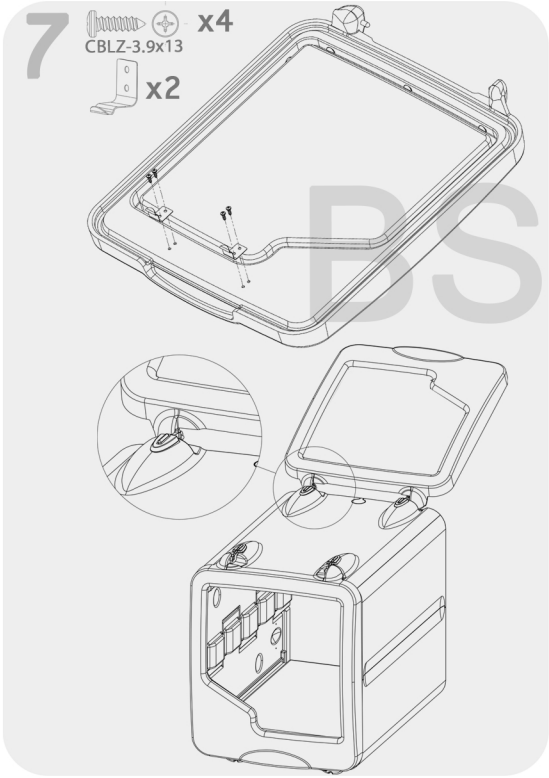
7
x4
CBLZ-3.9x13
x2
BS

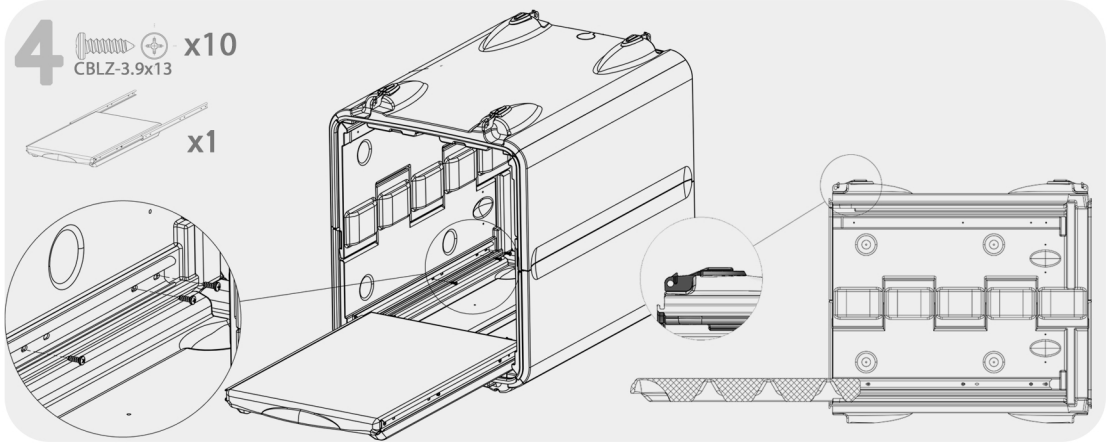
4
x10
CBLZ-3.9x13
x1

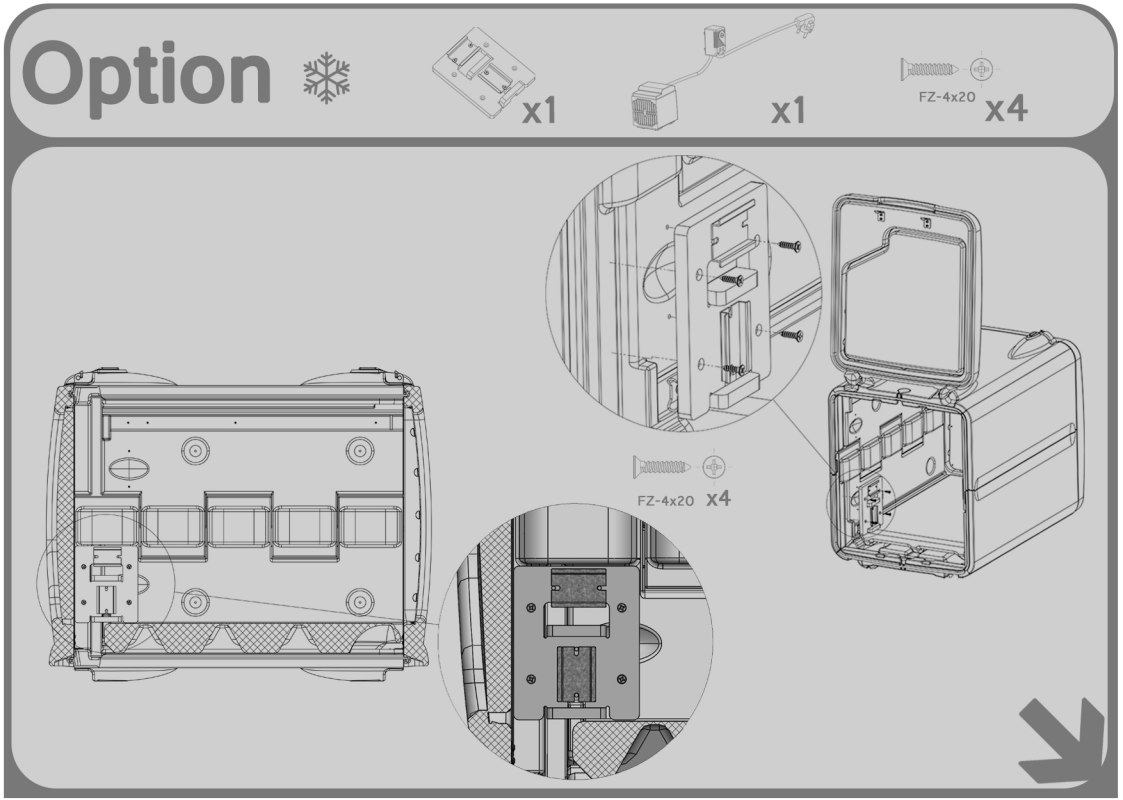
Option
x1
x1
FZ-4x20
x4
FZ-4x20
x4

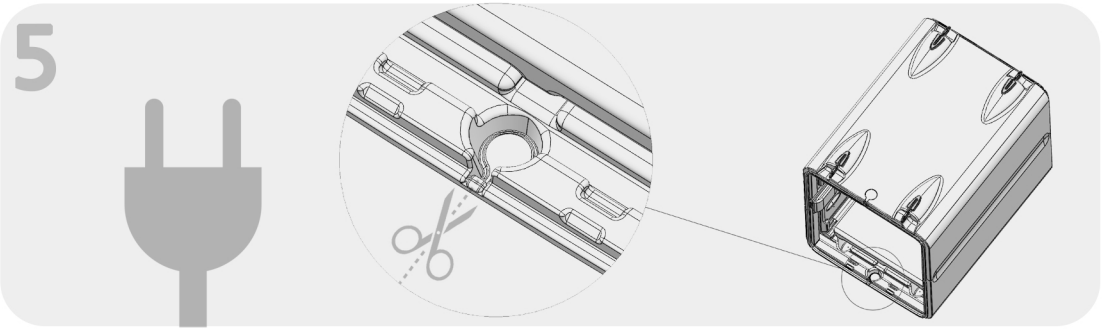
5